Bathtubs

BOV 03

OVE COLLECTION

Design Wetstyle Design Lab

WETMAR BiO™

ADVANCED FEATURES +++

FEATURES

Handcrafted in Montreal, Canada
Integrated overflow
Soft toe touch drain
Plug & Bathe drain connection for quick install
Oak bridge wenge shade included

TECHNICAL DETAILS

- **Width:** 36"
- **Length:** 72"
- **Height:** 22"
- **Weight:** 278 lbs / 126 kg

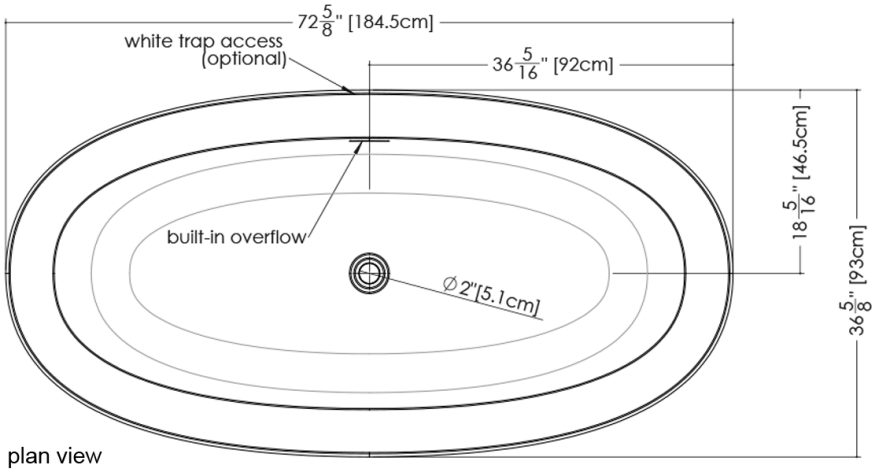

plan view

WETSTYLE Plug & Bathe™ overflow and drain connection system includes:

- Soft-touch pop-up drain, for built-in overflow. Fits both 1-1/2" ABS drain waste and 1-1/2" tubular brass
- 1-1/2" ABS Direct vertical drain waste fitting (copper/brass option also available)
- 1-1/2" ABS 90° Elbow drain waste fitting (copper/brass option also available)

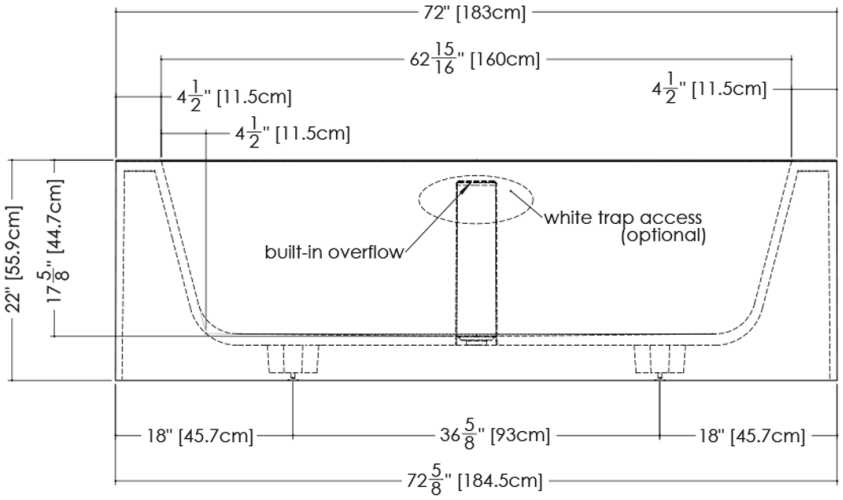

front view

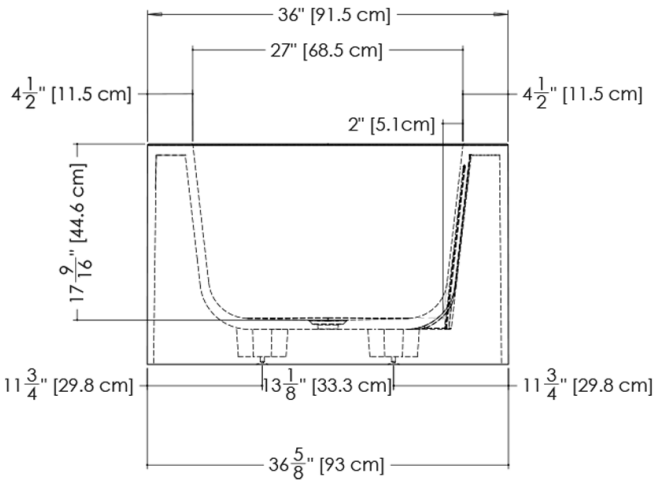

side view

BOV 03

WETSTYLE cannot be held responsible for any technical errors and reserves the right to make revisions without notice. Approximate measurement. The manufacturer accepts ¼" (6.35mm) variance.

AVAILABLE CONFIGURATIONS

Freestanding

OPTIONS

Model

- BOV03 - Freestanding

Drain Overflow Trim Finish

- Brushed Nickel Drain - No Trim Overflow (#BNNT)
- Brushed Nickel Drain and Overflow (#BN)
- Matte Black Drain - No Trim Overflow (#MBNT)
- Matte Black Drain and Overflow (#MB)
- Polished Chrome Drain - No Trim Overflow (#PCNT)
- Polished Chrome Drain and Overflow (#PC)
- Satin Brass Drain - No Trim Overflow (#SBNT)
- Satin Brass Drain and Overflow (#SB)

WETMAR BiO Finish

- White Matte (#MA)
- White True High Gloss (#GA)

Plumbing Connection

- Copper/Brass Connection - local code dependant (#COP)
- Standard ABS Connection

CODES/STANDARDS APPLICABLES

IAPMO-ANSI Z124.1
IAPMO-ANSI Z124.3
CSA B 45.0
CSA B 45.4

FAUCET AREA RECOMMENDED

Wall-mounted or floor-mounted

NOTES

OPTIONAL WHITE TRAP ACCESS (for deck-mounted faucet installation) is available by special order.