Sinks

VELXS 36

ELEMENT RAFFINÉ COLLECTION

Design Wetstyle Design Lab

WETMAR BiO™

FEATURES

Handcrafted in Montreal, Canada
Installation type: extra-slim recessed
Available with or without overflow
Overflow trim finish options: polished chrome, brushed nickel, matte black, satin brass or no metallic trim
Faucet hole options: 1 hole (for mono faucet), 3 holes (for widespread faucet) or no hole (for wall-mounted faucet)

TECHNICAL DETAILS

- **Width:** 20"
- **Length:** 36"
- **Height:** 0.62"
- **Weight:** 23 lbs / 10 kg

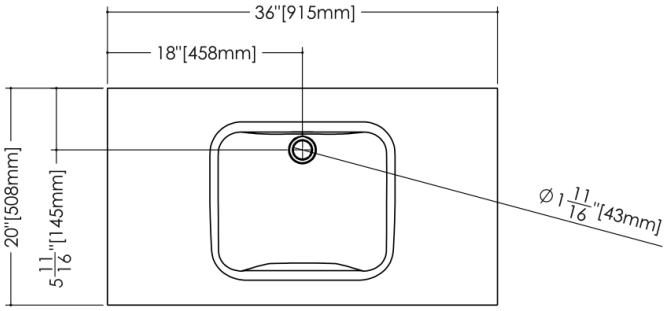

plan view

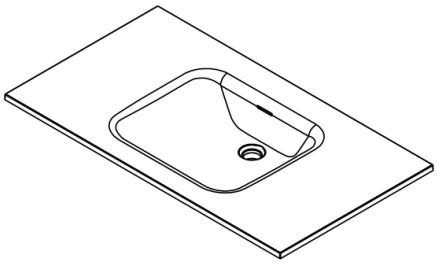
perspective view

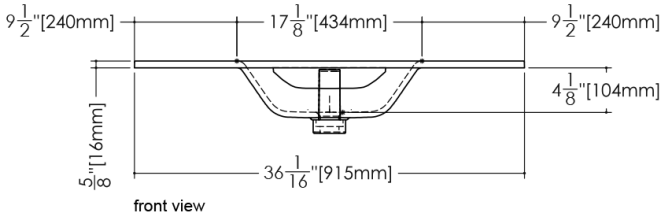

front view

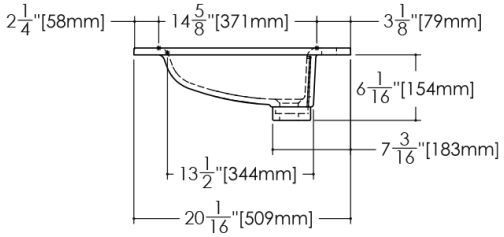

side view

VELXS 36

WETSTYLE cannot be held responsible for any technical errors and reserves the right to make revisions without notice. Approximate measurement. The manufacturer accepts ¼" (6.35mm) variance.

OPTIONS

Model

- VELXS36

Overflow

- No Overflow
- With Overflow - Brushed Nickel (#BN)
- With Overflow - Matte Black (#MB)
- With Overflow - No Trim (#NT)
- With Overflow - Polished Chrome (#PC)
- With Overflow - Satin Brass (#SB)

WETMAR BiO Finish

- White Matte (#MA)
- White True High Gloss (#GA)

Faucet Hole Drilling

- No Faucet Hole
- One Hole for Mono Faucet (#1)
- Three Holes for Widespread Faucet (#8)

CODES/STANDARDS APPLICABLES

IAPMO-ANSI Z124.1
IAPMO-ANSI Z124.3
CSA B 45.0
CSA B 45.4