Sinks

VC 836U

CUBE COLLECTION

Design Wetstyle Design Lab

WETMAR BiO™

FEATURES

Handcrafted in Montreal, Canada
Installation type: undermount
Available with or without overflow
Overflow trim finish options: polished chrome, brushed nickel, matte black, satin brass or no metallic trim

TECHNICAL DETAILS

- **Width:** 15"
- **Length:** 36"
- **Height:** 4.25"
- **Weight:** 27 lbs / 12 kg

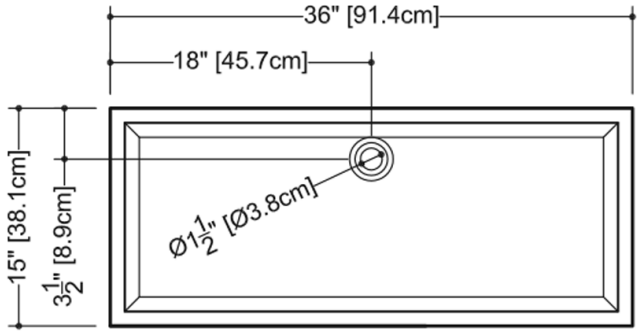

plan view

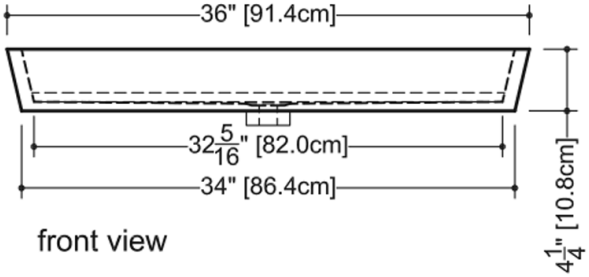

front view

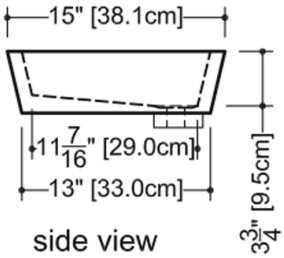

side view

Lip:
1" (2.5 cm)
all around

VC 836U

WETSTYLE cannot be held responsible for any technical errors and reserves the right to make revisions without notice. Approximate measurement. The manufacturer accepts ¼" (6.35mm) variance.

OPTIONS

Model

- VC836U

Overflow

- No Overflow
- With Overflow - Brushed Nickel (#BN)
- With Overflow - Matte Black (#MB)
- With Overflow - No Trim (#NT)
- With Overflow - Polished Chrome (#PC)
- With Overflow - Satin Brass (#SB)

WETMAR BiO Finish

- White Matte (#MA)
- White True High Gloss (#GA)

CODES/STANDARDS APPLICABLES

IAPMO-ANSI Z124.1
IAPMO-ANSI Z124.3
CSA B 45.0
CSA B 45.4
Mass Board Approved