Bathtubs

BC 08-02

CUBE COLLECTION

Design Wetstyle Design Lab

WETMAR BiO™

ADVANCED FEATURES +++

FEATURES

Handcrafted in Montreal, Canada
Feet made of WETMAR BiO
Integrated overflow
Soft toe touch drain
Plug & Bathe drain connection for quick install
Wood bridge in Wenge shade included
Feet in WETMAR BiO ™, white or dark brown

TECHNICAL DETAILS

- **Width:** 30"
- **Length:** 60"
- **Height:** 24.5"
- **Weight:** 212 lbs / 96 kg

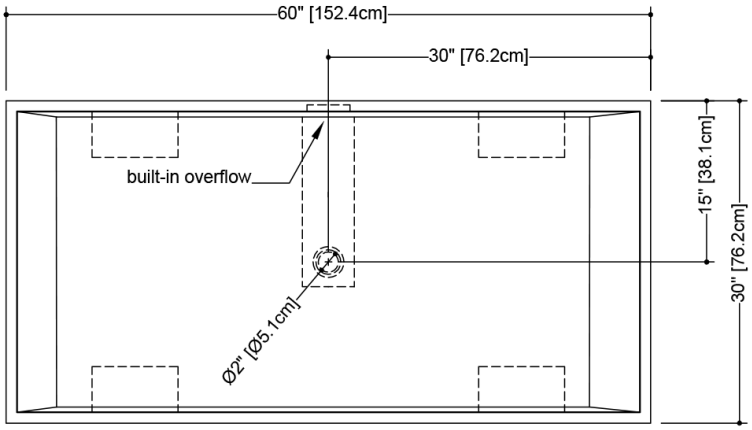

plan view

WETSTYLE Plug & Bathe ™ overflow and drain connection system includes:

- Soft-touch pop-up drain, for built-in overflow. Fits both 1-1/2" ABS drain waste and 1-1/2" tubular brass
- 1-1/2" ABS Direct vertical drain waste fitting (copper/brass option also available)
- 1-1/2" ABS 90° Elbow drain waste fitting (copper/brass option also available)

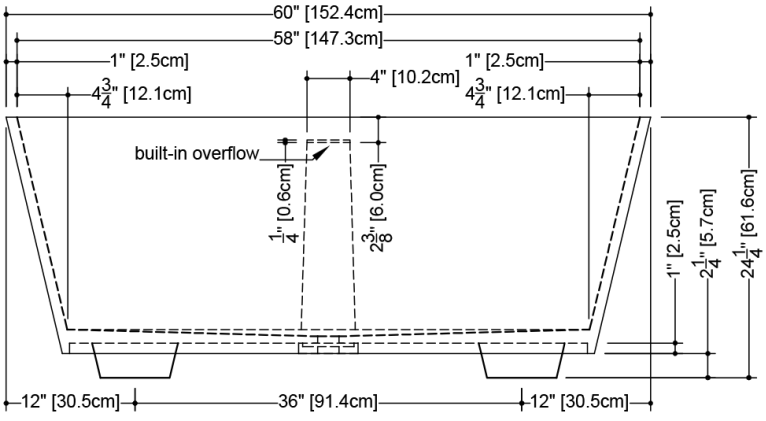

front view

BC 08-2

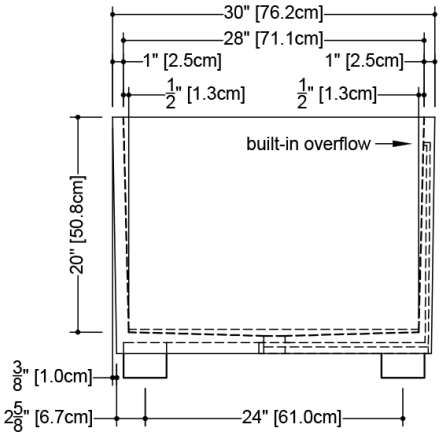

side view

WETSTYLE cannot be held responsible for any technical errors and reserves the right to make revisions without notice. Approximate measurement. The manufacturer accepts ¼" (6.35mm) variance.

AVAILABLE CONFIGURATIONS

Freestanding

OPTIONS

Model

- BC0802 - Freestanding

Drain Overflow Trim Finish

- Brushed Nickel Drain - No Trim Overflow (#BNNT)
- Brushed Nickel Drain and Overflow (#BN)
- Matte Black Drain - No Trim Overflow (#MBNT)
- Matte Black Drain and Overflow (#MB)
- Polished Chrome Drain - No Trim Overflow (#PCNT)
- Polished Chrome Drain and Overflow (#PC)
- Satin Brass Drain - No Trim Overflow (#SBNT)
- Satin Brass Drain and Overflow (#SB)

Feet Finish

- WETMAR BiO Dark Brown (#B)
- WETMAR BiO White (#W)

WETMAR BiO Finish

- White Matte (#MA)
- White True High Gloss (#GA)

Plumbing Connection

- Copper/Brass Connection - local code dependant (#COP)
- Standard ABS Connection

CODES/STANDARDS APPLICABLES

IAPMO-ANSI Z124.1
IAPMO-ANSI Z124.3
CSA B 45.0
CSA B 45.4
Mass Board Approved

FAUCET AREA RECOMMENDED

Wall-mounted or floor-mounted